R:\DRAFTING LIBRARY\Standards\Moore\2008 revised\WATER_102.dwg, 5/6/2008 1:59:44 PM, Adobe PDF.pc3, 1:2.09527

APPROVED ALTERNATES FOR VALVE BOX ASSEMBLIES
TYLER PIPE 562-S 80LBS.
BASS & HAYS 2436-S 80LBS.

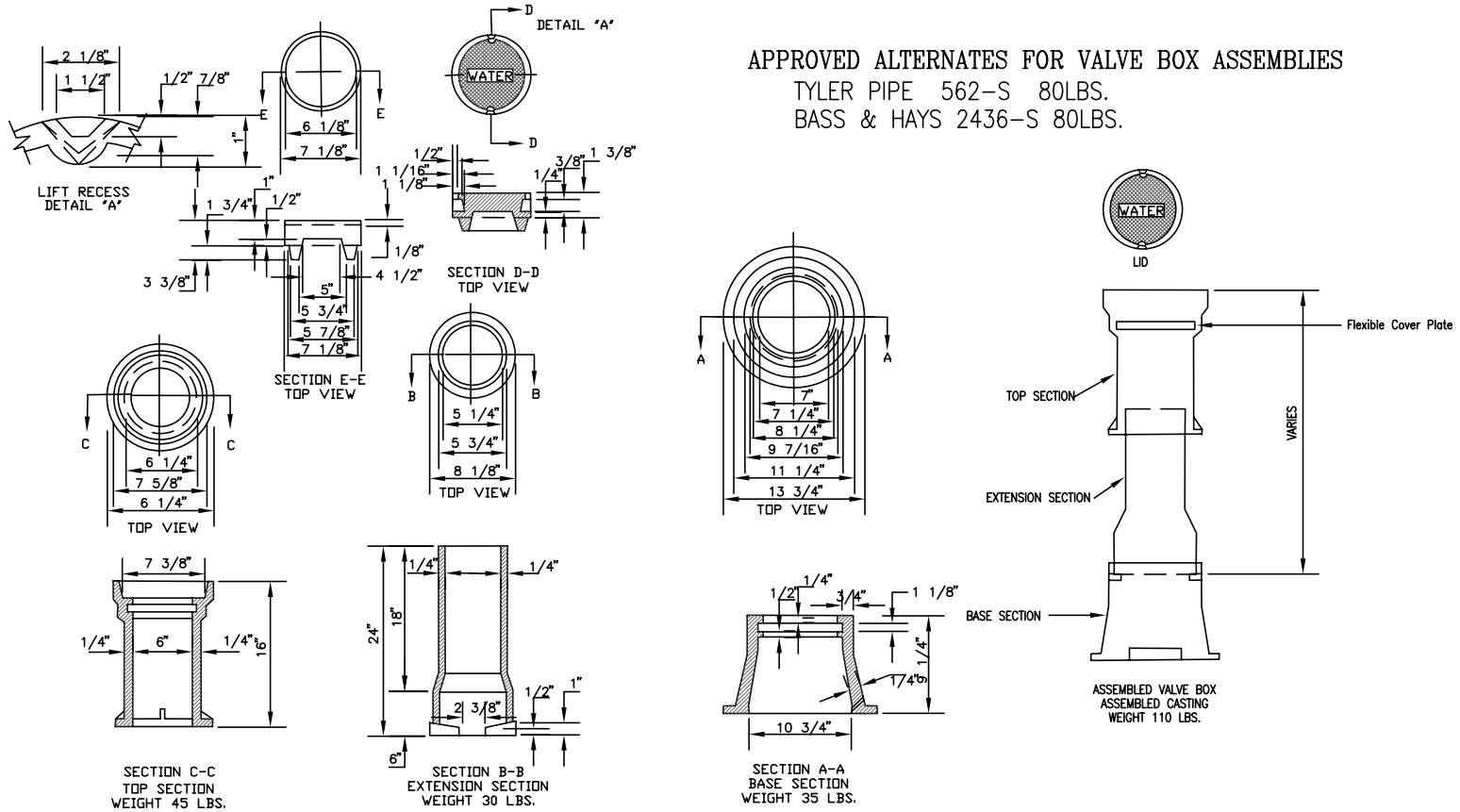

CAST IRON VALVE BOX AND LID

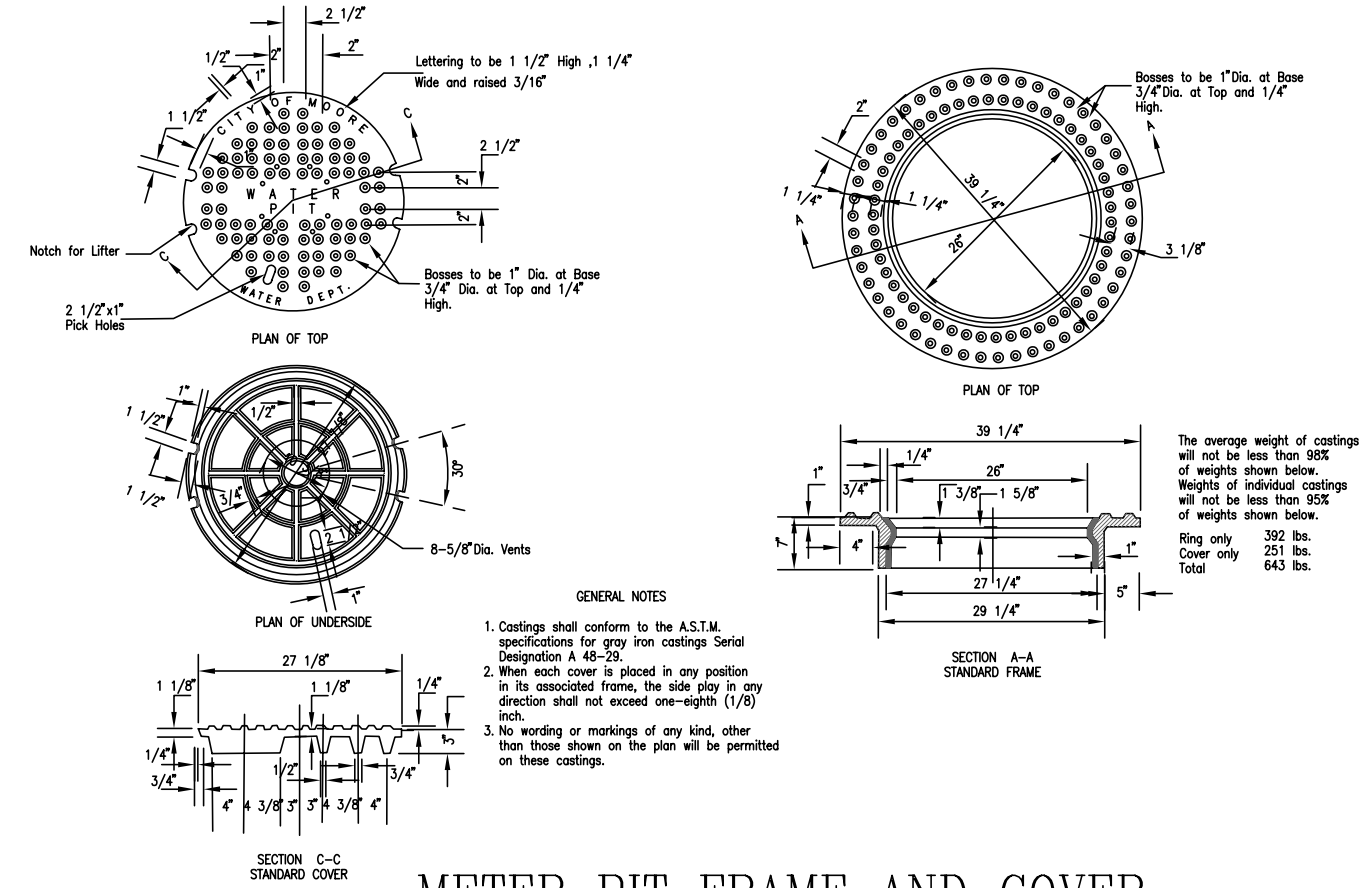

GENERAL NOTES

1. Castings shall conform to the A.S.T.M. specifications for gray iron castings Serial Designation A 48-29.
2. When each cover is placed in any position in its associated frame, the side play in any direction shall not exceed one-eighth (1/8) inch.
3. No wording or markings of any kind, other than those shown on the plan will be permitted on these castings.

The average weight of castings will not be less than 98% of weights shown below. Weights of individual castings will not be less than 95% of weights shown below.

Ring only	392 lbs.
Cover only	251 lbs.
Total	643 lbs.

METER PIT FRAME AND COVER

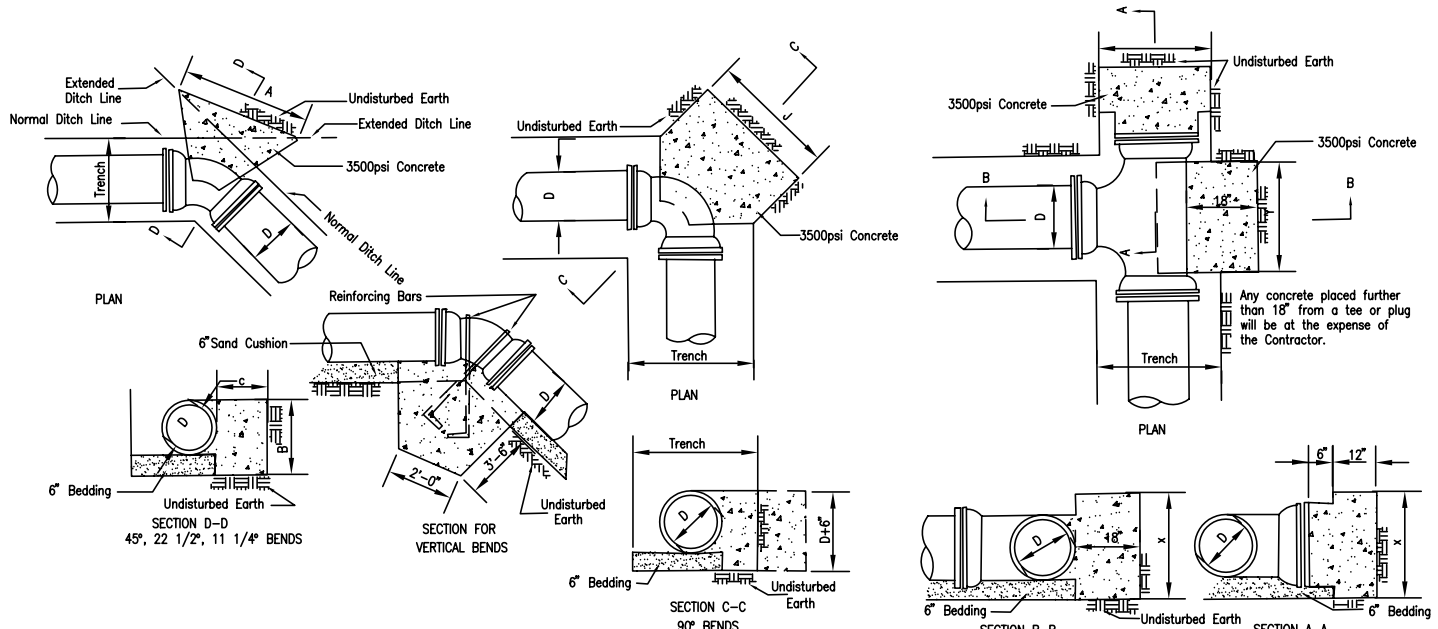

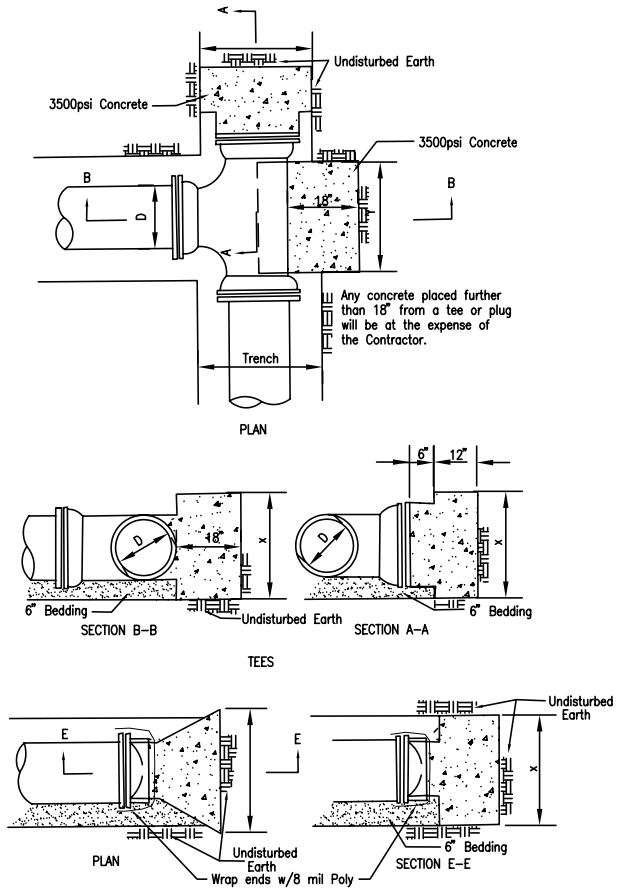

		DIMENSIONS FOR CONCRETE ANCHORAGES											
PIPE	TRENCH	45° BEND			22 1/2° BEND			11 1/4° BEND			TEE OR PLUG		
DIA.	WIDTH	A	B	C	A	B	C	A	B	C	X	Y	J
36	60	7'-0"	3'-0"	2'-6"	6'-0"	3'-0"	2'-6"	6'-0"	3'-0"	2'-6"	4'-0"	3'-4"	6'-5"
30	54	5'-6"	2'-6"	2'-0"	4'-6"	2'-6"	2'-0"	4'-6"	2'-6"	2'-0"	3'-6"	3'-0"	5'-8"
24	44	3'-9"	2'-6"	1'-10"	2'-6"	2'-6"	1'-1"	2'-0"	2'-6"	1'-0"	3'-3"	3'-0"	4'-9"
20	39	2'-9"	2'-2"	1'-8"	2'-0"	2'-2"	1'-1"	2'-0"	2'-2"	11"	3'-0"	2'-0"	4'-1"
18	37	2'-3"	2'-0"	1'-6"	2'-0"	2'-0"	1'-1"	2'-0"	2'-0"	11"	2'-3"	2'-0"	3'-9"
16	35	2'-0"	1'-10"	1'-5"	2'-0"	1'-10"	1'-1"	2'-0"	1'-10"	11"	1'-6"	2'-0"	3'-6"
12	30	2'-0"	1'-6"	1'-4"	2'-0"	1'-6"	1'-0"	2'-0"	1'-6"	11"	1'-0"	2'-0"	3'-0"
10	28	2'-0"	1'-4"	1'-4"	2'-0"	1'-4"	1'-0"	1'-10"	1'-4"	11"	1'-0"	1'-0"	2'-8"
8	26	2'-0"	1'-2"	1'-4"	1'-10"	1'-2"	1'-0"	1'-8"	1'-2"	11"	10"	1'-6"	2'-4"
6	24	2'-0"	1'-1"	1'-4"	1'-8"	1'-1"	1'-0"	1'-6"	1'-1"	11"	8"	1'-4"	2'-1"

HORIZONTAL - CONCRETE ANCHORAGES

NOTE: ALL VERTICAL BENDS SHALL ALSO BE SECURED WITH MEGA LUG FITTINGS

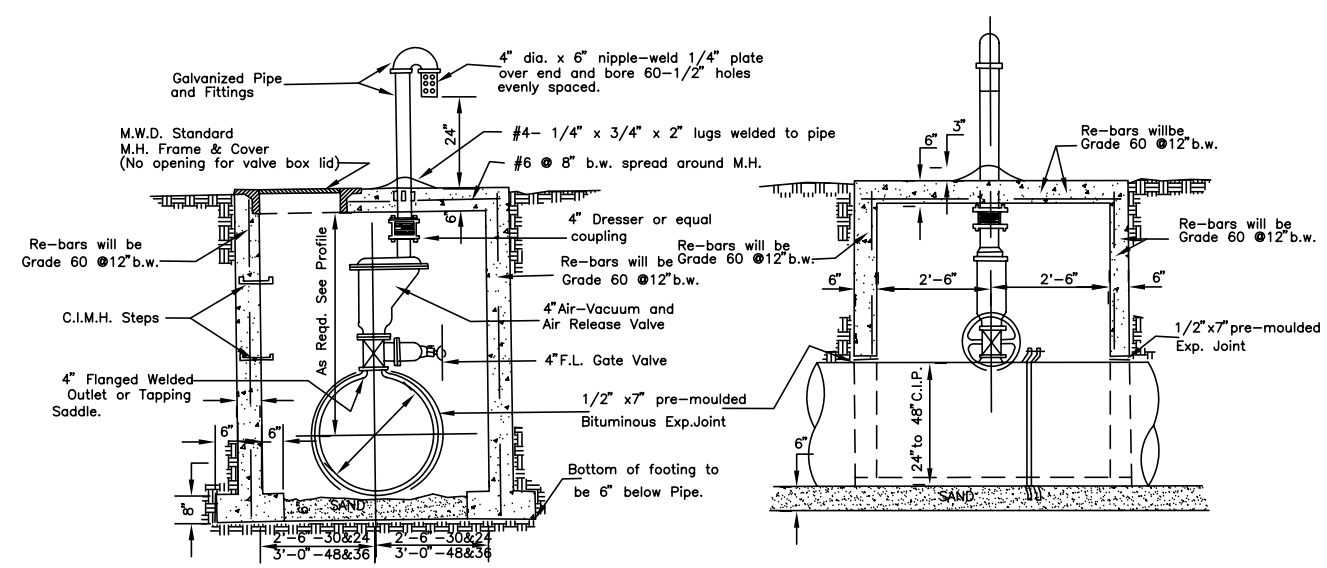

DETAIL OF 4" AIR VACUUM AND AIR RELEASE VALVE

The City of MOORE Oklahoma

Water Standard Details No. 102

APPROVED BY: Donald Vick DATE 03/06/2008
DONALD VICK, P.E.
CITY ENGINEER

REVISED: 03/05/2008